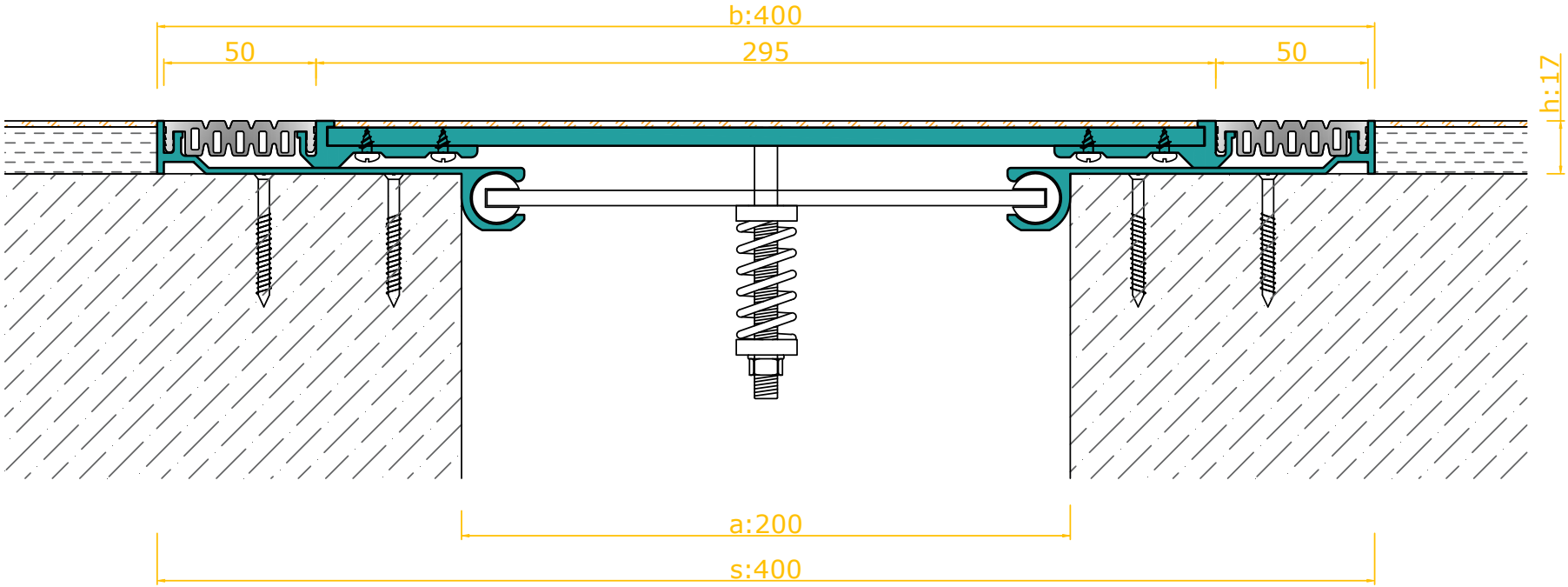

BUILDING AND SPAN EXPANSION JOINTS (NZ)
PO Box 84-177, Westgate
Auckland, 0652
New Zealand

Web: www.expansion-joint.co.nz
Email: Admin@expansion-joint.co.nz
Phone: (0800) SPAN-IT

"Your Local Joint Dealer!"

Title	**BAS®TwinSeal BAS803-200**				
Descript i on	Flush Mounted Seismic Expansion Joint Floor Profile			*Approved by*	Marcus Beagley
Number	1/1	*Date*	01/04/2021	*Drawn by*	Dilek YİĞİT

Information provided herein, including but not limited to, any drawing, design, photograph, graphic, or statement(s) ("Materials") are proprietary and the property of BAS® Expansion Joints (NZ)("BAS®NZ"). Reproduction, translation, or reduction to any electronic medium or machine readable form, in whole or part, is strictly prohibited, except for the express purpose for which it has been furnished, without prior written consent of BAS®NZ. All Materials contained herein are provided by BAS®NZ for information purposes only. BAS®NZ reserves the right to amend or withdraw any information contained in the Materials without notice. All technical or other advice by BAS®NZ, whether verbal or written, concerning products, or the use of products in specific situations ("Advice") is given by BAS®NZ and is used at the users own risk.